SMART-JET® HEX PRINT CONTROLLER

- Control up to Six Thermal Ink Jet (TIJ) Printheads - PRO, MAX, or REACH
- 10 in./254 mm LCD Display, Full Range of Bar Code and 2D Symbologies
- Ideal for Case Coding, Multi-Lane Packaging, and Web Applications

The Smart-Jet® HEX print controller offers the performance you need for any print application you have.

The Smart-Jet® HEX provides the advanced print features you require, with a maximum print height of up to 6 in./152 mm, for your most demanding inline print applications. You can print on both sides of a box – all controlled from the HEX controller's LCD touch screen. Utilizing maintenance-free thermal ink jet technology (TIJ), the HEX print controller delivers high resolution print for text, counters, expiration date, Julian date, shift codes, logos, and bar codes. The HEX is designed to deliver the high-quality inline printing results you require.

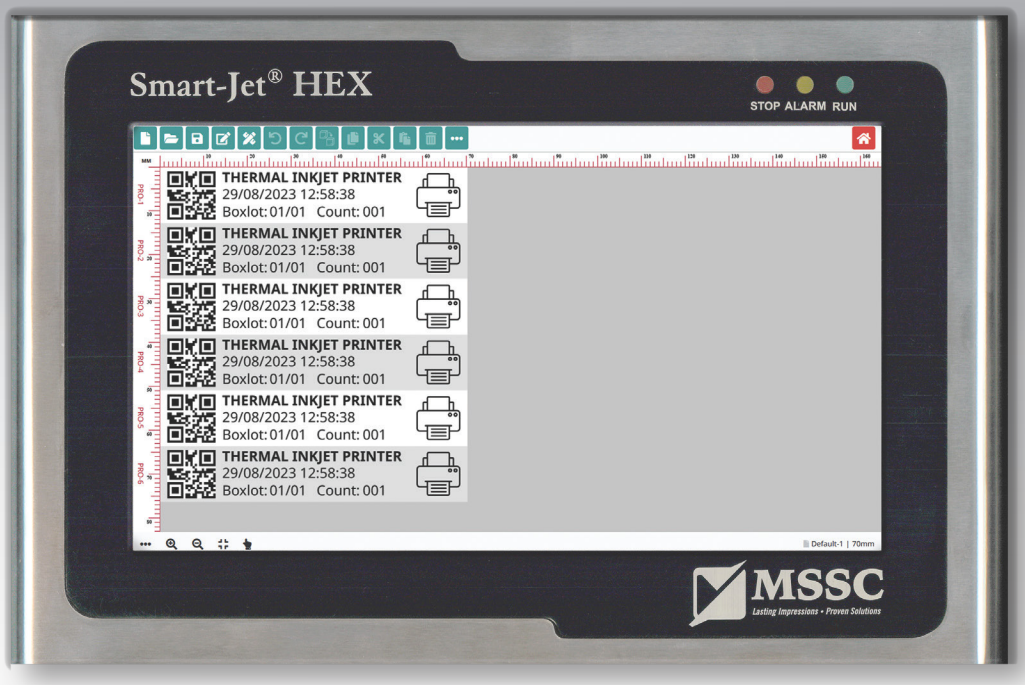

Contact your local distributor to order or to see the full line of superior quality MSSC products.

MSSC
Phone: (618) 343.1006 **Fax:** (618) 343.1016
926 McDonough Lake Road, Collinsville, Illinois 62234 USA
www.mssclic.com

Smart-Jet® HEX Print Controller

SMART-JET® HEX Print Controller

Dynamic Print Controller for Up To Six TIJ Printheads

Features:

- Choice of up to six (6) independent or stitched printheads
- 10 in./254 mm LCD touch screen
- Full range of bar code symbologies, including linear and 2D symbols
- Complete range of inks, including colors, for printing on a variety of substrates, including kraft corrugated, plastic, flexible film, glass, and coated corrugated
- Choice of fonts, including ability to import TrueType fonts
- Graphics and logos, including ability to import custom graphics, images, and logos
- Message length up 4.9 ft./1.5 m
- Network via Ethernet
- Import and print databases (*.txt, *.csv)
- Receive variable data from scales, scanners, or other devices for on-demand printing using MSSC's POD Print Command Protocol
- Create messages with the web-based program (www.tijfreedesign.com) to download to printer via USB or Ethernet
- Selection of operating languages, including English, Spanish, French, German, Polish, Korean, and many others
- Printable languages include all operating system languages

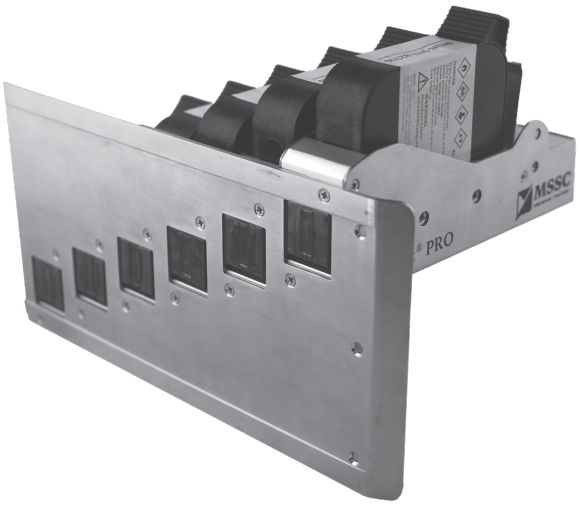

Specifications:

- Controller Dimensions (L × W × H): 12 in. × 8 in. × 2.5 in./305.6 mm × 200.9 mm × 64.2 mm
- Controller Weight: 6.1 lbs./2.75 kg
- Display: 10"/25.4 cm LCD touch screen
- Power Supply: AC 100V–240V, 50/60Hz, DC 24V 9.2A
- 8 GB Storage for messages and logos
- Print Resolution: Adjustable, up to 600 x 600 dpi
- Print Speed: Up to 249 ft./76 m per min at 300 x 300 dpi
- Print Density: 3 levels, user defined
- Printhead Cable Length: 6.6 ft./2 m; Optional Lengths: 16.4 ft./5 m; 32.8 ft./10 m
- Throw Distance: Varies with printhead type; up to 0.4 in./10 mm with REACH Printhead

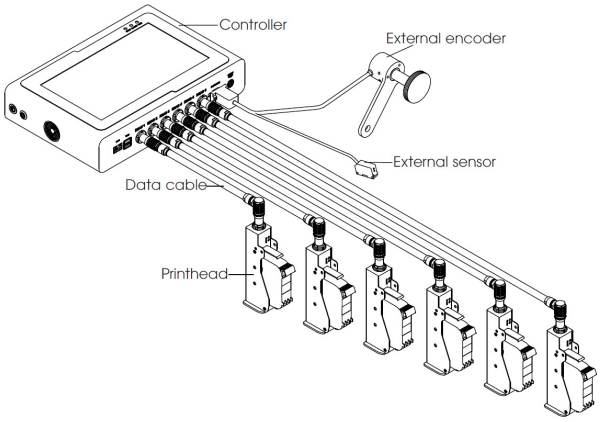

TS PRO

- Up to 0.5 in./12.7 mm print height
- Water-based and solvent inks
- Multiple colors
- Up to 748 ft./228 m per min
- Up to 0.2 in./5 mm throw distance

TS MAX

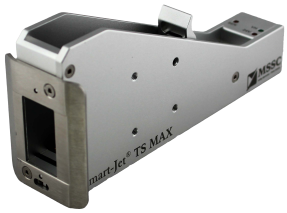

- Up to 1 in./25.4 mm print height
- Water-based and solvent inks
- Multiple colors
- Up to 748 ft./228 m per min
- Up to 0.2 in./5 mm throw distance

TS REACH

- Up to 0.53 in./13.5 mm print height
- Very fast drying MEK ink, available in black and red; PVC-penetrating inks
- Up to 299 ft./91 m per min
- Up to 0.4 in./10 mm throw distance

MSSC
Phone: (618) 343.1006 **Fax:** (618) 343.1016
926 McDonough Lake Road, Collinsville, Illinois 62234 USA
www.mssclic.com